KYCON, Inc. 305 Digital Drive, Morgan Hill, CA 95037 (408)494-0330

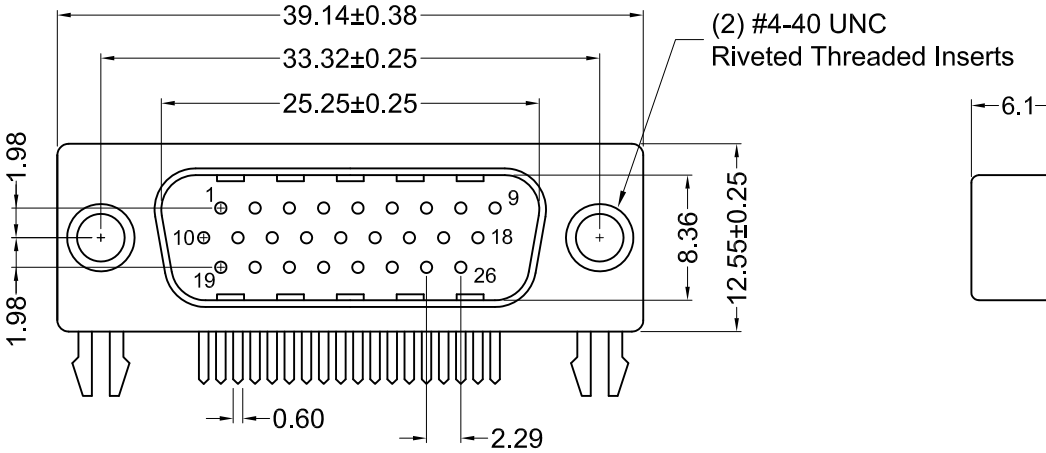


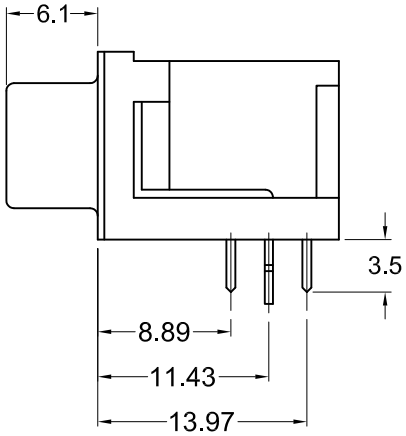


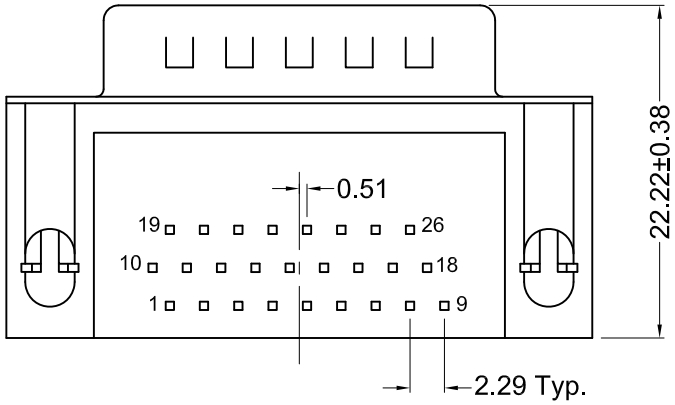


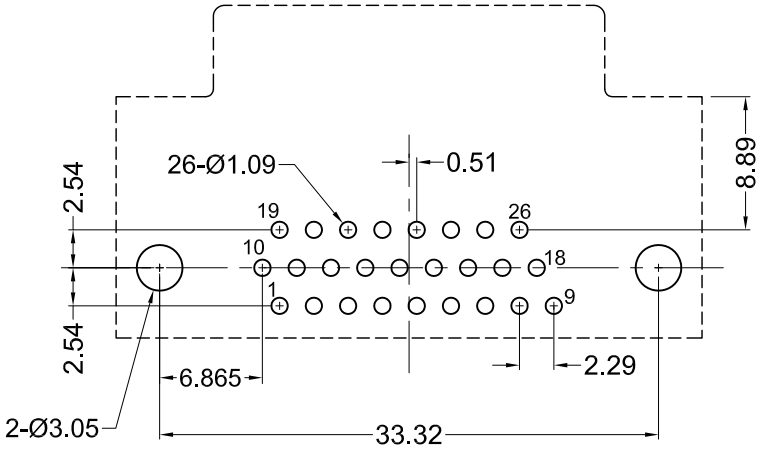


Recommended PCB Layout
(Bottom View)

## Material and Finish

Shell: Steel, nickel plated

Insulator: High Temperature with glass-fiber reinforcement, UL94V-0 rated
Color: Black

Contact Material:
Plug - Brass

Contact Plating Options:

Standard: gold flash on mating end, tin on termination end, nickel underplate on entire contact

15 Option: 15u" gold on mating end, tin on termination end, nickel underplate on entire contact

30 Option: 30u" gold on mating end, tin on termination end, nickel underplate on entire contact

## Electrical Specifications

Rated Current: 1.5A

Rated Voltage: 29V RMS

Insulation Resistance:
more than 1000 megohms at 500V DC

Contact Resistance:
13 milliohms max.

Dielectric Strength:
1000V for 1 minute

Durability Rating:
500 mating cycles min.

Operating Temperature:
-55°C to +105°C

| Part Number | Contact Area Plating Finish |
|---|---|
| K66XHT-A26P-N | Gold Flash (standard) |
| K66XHT-A26P-N15 | 15u" Gold (15 option) |
| K66XHT-A26P-N30 | 30u" Gold (30 option) |

RoHS COMPLIANT

E140125 LR78160

| Tolerances |
|---|
| X.X ± 0.25 |
| X.XX ± 0.15 |
| Unless Stated Otherwise |

| REV. | DATE | DESCRIPTION | REV. BY | CHK. BY | DRAWN BY | DATE |
|---|---|---|---|---|---|---|
| A1 | 12/09/08 | New Drawing | S. Vien | H. MA | S. Vien | 07/10/08 |
| A2 | 01/18/16 | ECO#15-019 | H. MA | W. Cook | | |
| | | | | | UNITS | |
| | | | | | mm | |

K66XHT-A26P-N

HD, D-Sub, RoHS Compliant

High Temp., 26 Pos., Male, BoardLocks

KYCON