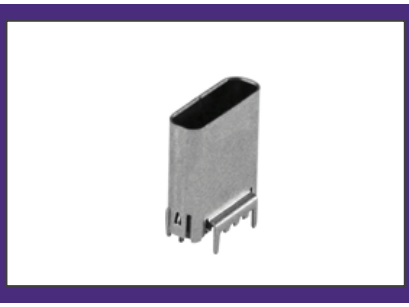

2D Drawing	IGES	STEP	3D PDF
Solder Profile	CofC RoHS Compliant	CofC REACH Compliant	UL Plastic File
Certificate of Origin	Check Stock	Request a Sample	Send Us An Email

Generated Part Number

KUSBVX-SMT-CS-B30TRC

Part Number Builder

KUSBVX-SMT	–	CS	B	30	TRC
Series		Type	Insulator Color	Plating	Packaging

Series
KUSBVX-SMT - USB Type C Socket, Vertical Mount, SMT contacts

Type
CS - C Type

Insulator Color Option
B - Black
W - White

Plating Option
30 - 30µ" Gold Plating

Packaging
TRC - Tape and Reel with Cap

Contact Kycon for more options

UNIVERSAL SERIAL BUS: KUSBVX-SMT Series
USB Type C Socket, Vertical Mount, SMT Contacts

Product Features
USB Version 3.2
Gen 2 (10 Gbps)
Vertical Mount
SMT Contacts

Performance Specifications
Materials and Finish
Housing
High Temperature Thermoplastic, UL94V-0 Rated
Shell:
Stainless Steel, Nickel Plated
Contact Material
Copper Alloy
Contact plating
Standard-Gold Flash on Contact Area,
Matte Tin Plated on Solder Tails, All over Nickel Underplate

30u" Gold Plated on Contact Area, Matte Tin Plated on Solder Tails, All over Nickel Underplate

Electrical Characteristics
Rated Current:
5.0A Collectively For Pins
A4, A9, B4, and B9 (VBUS)
1.25A For Pin B5 (VCONN)
5.0A Collectively For Pins
A1, A12, B1 and B12 (GND)
0.25A For All Other Pins
Rated Voltage: 30V
Insulation Resistance
100 Megohms Min. at 250V DC
Contact Resistance
40 milliohms Max.
Dielectric Withstanding Voltage
100V AC RMS For 1 Minute

Mechanical Characteristics
Insertion Force: 5N - 20N
Withdrawal Force: 6N - 20N
Durability: 10000 Mating Cycles Min.
Operating Temperature:
-55°C to +85°C
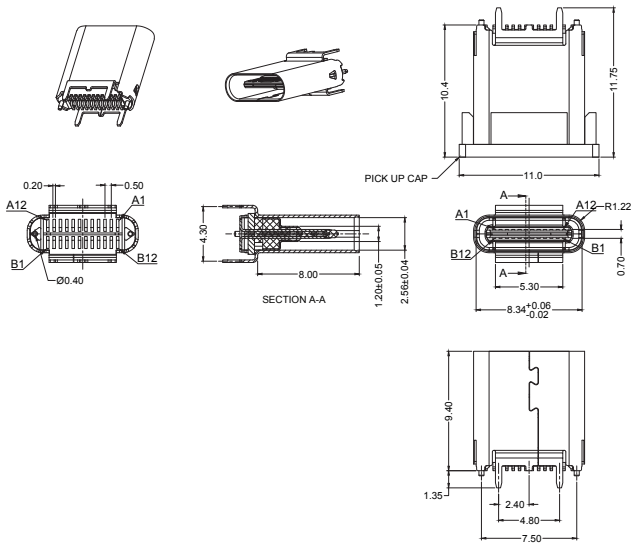
KUSBVX-SMT
Dimensions in mm