KYCON, Inc. 305 Digital Drive, Morgan Hill, CA 95037 (408)494-0330

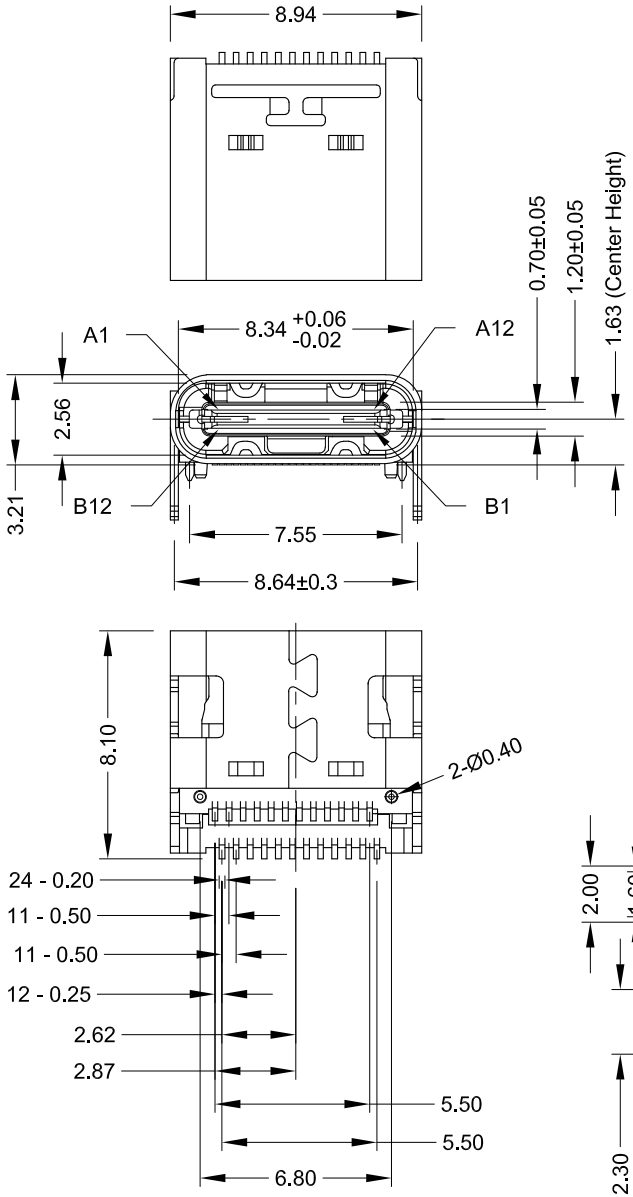


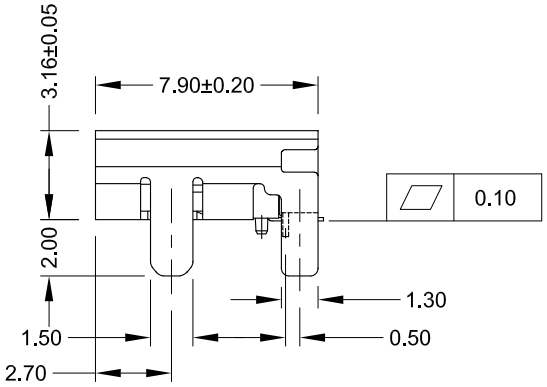


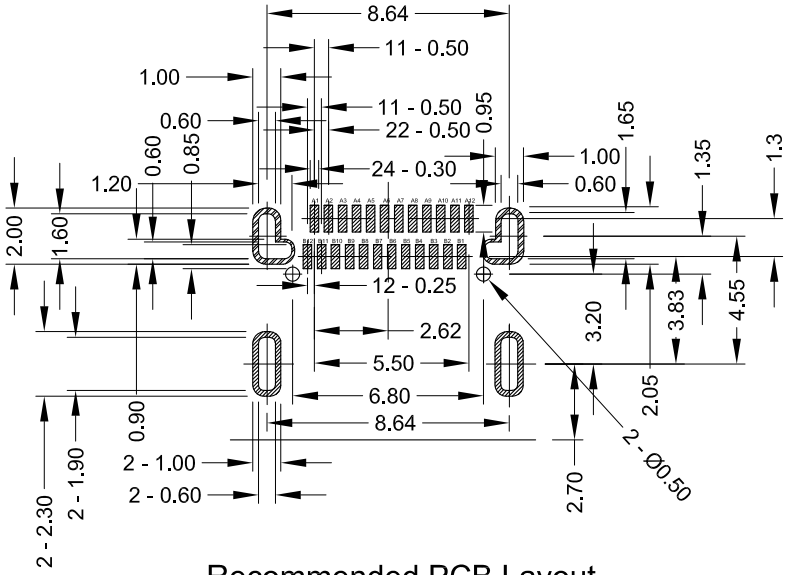


Recommended PCB Layout
(Top View)

## Materials and Finish

Housing: High Temp Thermoplastic
UL 94V-0 Rated, Black Color

Shield: Stainless Steel, Nickel Plated

Contact Material:
Copper Alloy

Contact plating:
Gold Flash on Contact Area
All over Nickel Underplate

## Electrical Characteristics

Rated Current:
5.0A Inclusive (1.25A Ea.) For Pins A4, A9, B4, and B9 (VBUS)
1.25A For pin B5 (VCONN)
6.25A Inclusive For Pins A1, A12, B1, and B12 (GND)
0.25A For All Other Pins

Rated Voltage: 30V

Insulation Resistance:
100 Megohms Min. at 250V DC

Contact Resistance:
30 milliohms Max.

Dielectric Withstanding Voltage:
100V AC RMS for 1 Minute

## Mechanical Characteristics

Insertion Force: 2kgf MAX.

Withdrawal Force: .8kgf MIN.

Durability: 10000 Mating Cycles Min.

Operating Temperature:
-40°C to +85°C

RoHS COMPLIANT

| Tolerances |
|---|
| X.X ± 0.30 |
| X.XX ± 0.20 |
| Unless Stated Otherwise |

| REV. | DATE | DESCRIPTION | REV. BY | CHK. BY |
|---|---|---|---|---|
| A0 | 06/29/18 | New Drawing | G. Serrato | D. Shehan |
| A0.1 | 07/30/18 | Updated Dimensions | G. Serrato | D. Shehan |
| A0.2 | 07/30/18 | Updated Dimensions | D. Shehan | N/A |
| A1 | 08/22/18 | Release Drawing | C. Kelleher | N/A |
| A2 | 05/09/19 | ECO #19-047 | G. Serrato | D. Shehan |

| DRAWN BY | DATE |
|---|---|
| G. Serrato | 06/29/18 |
| | UNITS |
| | mm |

KUSBX-SMT3-CS-BTR

USB Type C, Dual SMT Pins, Long TH Shield Tab

Gold Flash, Black, T/R, RoHS Compliant

KYCON