KYCON, Inc. 305 Digital Drive, Morgan Hill, CA 95037 (408)494-0330

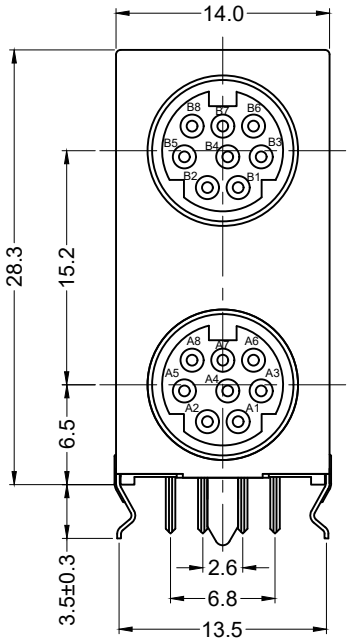

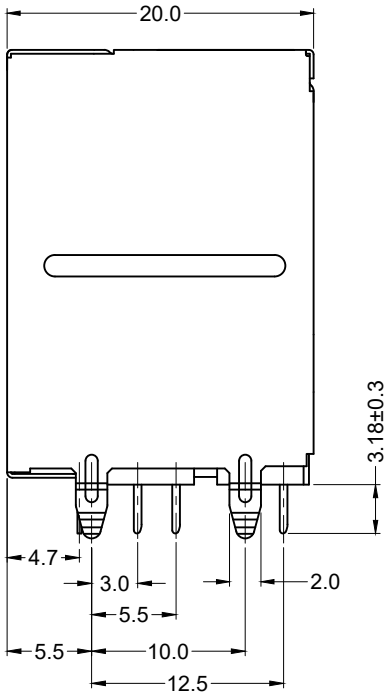

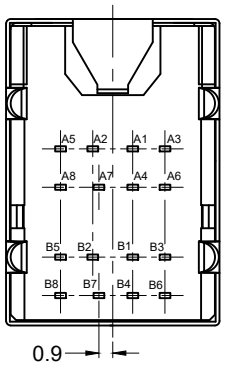

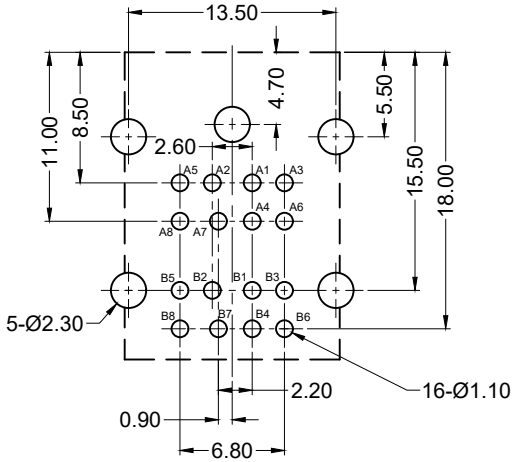

Recommended PCB Layout
(Bottom View)

Material and Finish

Body: PBT Thermoplastic, Black

Contacts: Copper Alloy
Gold Flash on Contacts,
Tin on Termination

Shield: SPCC, Tin Plated

Electrical Characteristics

Contact Resistance:
Before Test:
Plug to Terminals: 30 Milliohms Max.
After Test:
Plug to Terminals: 60 Milliohms Max.

Insulation Resistance:
500 Megohms Min.

Dielectric Withstanding Voltage:
500V AC RMS For 1 Minute

Current Rating:
2 A at 12V DC

Mechanical Characteristics

Durability Test: 500 Cycles Min.

Insertion Force: 0.4kg - 3.5kg

Extraction Force: 0.5kg - 4.5kg

Operating Temperature: -25°C to +80°C

RoHS COMPLIANT

E140125

LR78160

Tolerances
X.X ± 0.3
X.XX ± 0.15
Unless Stated Otherwise

REV.	DATE	DESCRIPTION	REV. BY	CHK. BY
B4	06/30/11	ECO #11-020	S. Vien	H. MA
B5	01/15/13	ECO #12-063	S. Vien	P. DalCanto
B6	02/19/15	ECO #15-017	H. MA	C. Furumasu
B7	05/28/15	ECO #14-021	C. Kelleher	H. Ma
B8	04/25/19	ECO #19-040	G. Serrato	D. Shehan
B9	04/09/25	ECO #25-031	K.Wang	C.Kelleher

DRAWN BY	DATE
H. MA	7/26/04
	UNITS
	mm

KMDGX-8S/8S-S4N

Stacked Mini-Din, 8/8, RoHS Compliant

Fully Shielded, Gold Contacts

KYCON